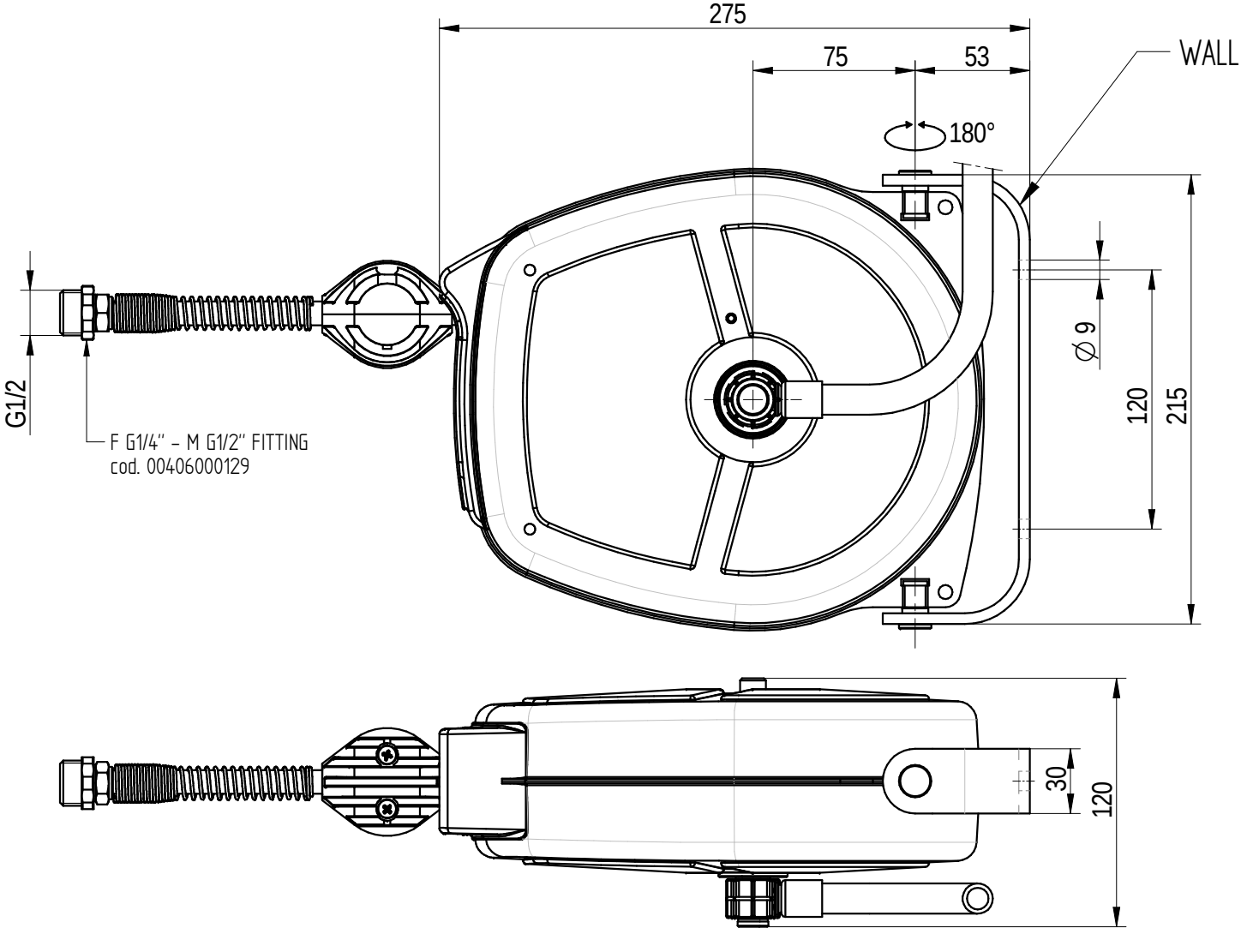
275
75
53
WALL
180°
G1/2
F G1/4" - M G1/2" FITTING
cod. 00406000129
∅ 9
120
215
30
120